LASERS

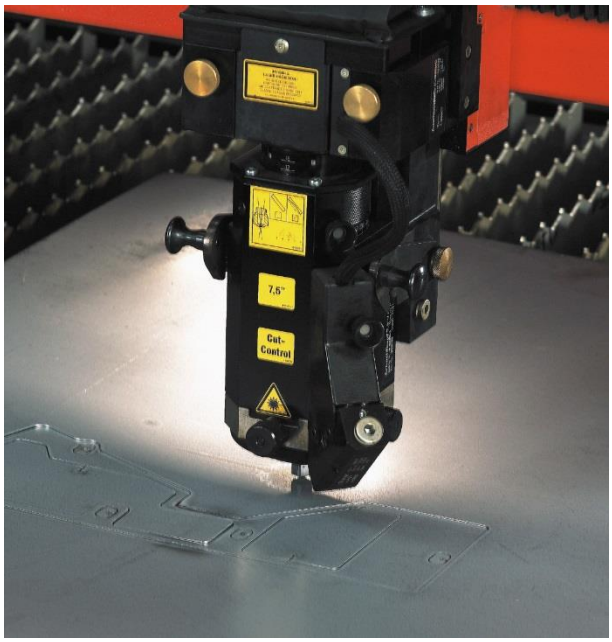

Compiled By

LMC Laser Services Pty. Ltd.
31-33 Sullivan Street, Moorabbin, VIC, 3189
Ph: 03 9555 5525 | Fax: 03 9555 2970
Email: sales@lmclaser.com.au | www.lmclaser.com.au

Preface

A CO_2 laser is a device that generates a collimated beam of "raw" heat energy. Standing alone it has extremely limited potential. However, its output, when directed and manipulated with respect to a workpiece, has consistency that makes it ideally suited for automated processing.

To accomplish this, lasers must be integrated as part of larger systems. In addition to the laser, each system features beam delivery components, a method of material handling, and a control system to govern its action. These systems range from simple set-ups where material is moved linearly under a fixed beam to sophisticated multi-axis motion systems used for three-dimensional contour cutting.

Components of the beam delivery system are those that accept the beam from the laser, direct it to the workpiece, and condition it into a useable form of energy. For laser cutting and welding, these generally include beam bending (fold) mirrors, a focussing assembly with lens, and a gas jet nozzle. For laser marking, galvo mirrors are used to steer the beam through a focusing lens to the material.

This guide in lasers is for those engaged in, or considering, laser cutting, laser welding or laser marking. It is packed full of useful, practical information produced from LMC Laser's extensive experience in the laser industry.

Figure 1 - CO_2 Laser Cutting System

Introduction

The summer of 1960 saw the world's first demonstration of an entirely new source of light, so concentrated and powerful, that it could produce power densities millions of times as intense as those on the surface of the sun, yet be controlled so precisely that surgeons could use it to perform delicate operations on the human eye. The beam from this device could burn holes in steel plates and set carbon on fire. It spread out so little that if sent from the earth to the moon, it would illuminate an area of the moon's surface less than two miles in diameter. This new device was the laser. LASER is an acronym for ***L**ight **A**mplification by **S**timulated **E**mission of **R**adiation,* the process that takes place inside the device.

Simply stated, the laser is a beam of light. The light from a house light spreads in all directions

in a number of various frequencies and waves. The very fact that light does travel in waves led to the development of the laser, which concentrates the waves of light into light beams of tremendous energy.

The energy generated by a laser is in or near the optical portion of the electromagnetic spectrum. Energy is amplified to extremely high intensity by an atomic process called stimulated emission. The term "radiation" is often misinterpreted because the term is also used to describe radioactive materials or ionising radiation. The use of the word in this context, however, refers to an energy transfer. Energy moves from one location to another by conduction, convection, and radiation. The colour of laser light is normally expressed in terms of the laser's wavelength. The most common unit used is a nanometre (nm). There are one billion nanometres in one metre.

Originally developed by the use of ruby crystals, lasers are now produced by many solid materials, liquids, gases, and semiconductor devices.

The laser is one of the most important developments of modern science and is used extensively in medicine, by the armed forces, and in every facet of industry where precise measurements are needed. Hundreds of new applications are being proposed and developed by engineers and scientists, and new uses appear unlimited in scope.

Within the past 20 years, the application of lasers has moved from the research and development laboratories to the 24 hour a day world of production. Today, lasers are used for welding, marking, engraving, medical work and more, but no area of laser processing manufacturing has grown as fast as that of laser cutting.

CHAPTER 1

Laser Safety

Laser Beam Hazards

A laser produces an intense, highly directional beam of light. If directed, reflected, or focused upon an object, laser light will be absorbed, raising the temperature of the surface and/or the interior of the object, potentially causing an alteration or deformation of the material. These properties which have been applied to laser surgery and materials processing can also cause tissue damage. In addition to these obvious thermal effects upon tissue, there can also be photochemical effects when the wavelength of the laser radiation is sufficiently short, i.e., in the ultraviolet or blue region of the spectrum. Today, most high-power lasers are designed to minimise access to laser radiation during normal operation. Lower-power lasers may emit levels of laser light that are not a hazard.

Figure 2 - Laser Safety Sign

The human body is vulnerable to the output of certain lasers, and under certain circumstances exposure can result in damage to the eye and skin. Research relating to injury thresholds of the eye and skin has been carried out in order to understand the biological hazards of laser radiation. It is now widely accepted that the human eye is almost always more vulnerable to injury than human skin. The cornea (the clear, outer front surface of the eye's optics), unlike the skin, does not have an external layer of dead cells to protect it from the environment. In the far-ultraviolet and far infrared regions of the optical spectrum, the cornea absorbs the laser energy and may be damaged. At certain wavelengths in the near-ultraviolet region and in the near-infrared region, the lens of the eye may be vulnerable to injury. Of greatest concern, however, is laser exposure in the retinal hazard region of the optical spectrum, approximately 400 nm (violet light) to 1400 nm (near-infrared) and including the entire visible portion of the optical spectrum. Within this spectral region collimated laser rays are brought to focus on a very tiny spot on the retina

In order for the worst case exposure to occur, an individual's eye must be focussed at a distance and a direct beam or specular (mirror-like) reflection must enter the eye. The light entering the eye from a collimated beam in the retinal hazard region is concentrated by a factor of 100,000 times when it strikes the retina. Therefore, a visible, 10 milliwatt/cm2 laser beam would result in a 1000 watt/cm2 exposure to the retina, which is more than enough power density (irradiance) to cause damage.

If the eye is not focussed at a distance or if the beam is reflected from a diffuse surface (not mirror-like), much higher levels of laser radiation would be necessary to cause injury. Likewise, since this ocular focussing effect does not apply to the skin, the skin is far less vulnerable to, injury from these wavelengths.

Non-Beam Laser Hazards

In addition to the direct hazards to the eye and skin from the laser beam itself, it is also important to address other hazards associated with the use of lasers. These non-beam hazards, in some cases, can be life threatening, e.g. electrocution, fire, and asphyxiation. Other non-beam hazards include noise, X-radiation, explosion, cryogenics, compressed gas and airborne contaminants. Fumes generated from cutting some plastics and other materials can be highly toxic.

Laser Hazard Classification

Lasers are grouped into four classes, from the least dangerous Class 1 to the most dangerous Class 4.

Research studies, along with an understanding of the hazards of sunlight and conventional, man-made light sources have permitted scientists to establish safe exposure limits for nearly all types of laser radiation. These limits are generally referred to as Maximum Permissible Exposures (MPE) by laser safety professionals. In many cases it is unnecessary to make use of MPE's directly. The experience gained in millions of hours of laser use in the laboratory and industry has permitted the development of a system of laser hazard categories or classifications. The manufacturer of lasers and laser products is required to certify that the laser is designated as one of four general classes, or risk categories, and label it accordingly. This allows the use of standardised safety measures to reduce or eliminate accidents depending on the class of the laser or laser system being used. The following is a brief description of the four primary categories of lasers:

A Class 1 laser is considered safe based upon current medical knowledge. This class includes all lasers or laser systems which cannot emit levels of optical radiation above the exposure limits for the eye under any exposure conditions inherent in the design of the laser product. There may be a more hazardous laser embedded in the enclosure of a Class 1 product, but no harmful radiation can escape the enclosure.

Class 2 denotes low-power visible lasers or laser systems which, because of the normal human aversion response (i.e. blinking, eye movement,, etc.), do not normally present a hazard, but may present some potential for hazard if viewed directly for extended periods of time (like many conventional light sources).

Class 3a denotes some lasers or laser systems having a CAUTION label that normally would not injure the eye if viewed for only momentary periods (within the aversion response period) with the unaided eye, but may present a greater hazard if viewed using collecting optics. Another group of Class 3a lasers have DANGER labels and are capable of exceeding permissible exposure levels for the eye in 0.25s and still pose a low risk of injury.

Class 3b denotes lasers or laser systems that can produce a hazard if viewed directly. This includes intrabeam viewing of specular reflections. Normally, Class 3b lasers will not produce a hazardous diffuse reflection.

A Class 4 laser or laser system is any that exceeds the output limits (Accessible Emission Limits, AEL's) of a Class 3 device. As would be expected, these lasers may be either a fire or skin hazard or a diffuse reflection hazard. Very stringent control measures are required for a Class 4 laser or laser system.

C H A P T E R 2

Lasers

High Power CO_2 Lasers

There are several types of high power CO_2 lasers, slow flow, fast flow, transverse flow and slab lasers. In a slow flow laser, the relatively low flow rate of the gas limits heat conduction through the glass tubes to dielectric oil or water cooling jackets, thereby outputting only about 50-75 watts per meter of cavity length. The fast flow principle relies on high-speed gas transport to aid in heat removal in place of oil cooling jackets. This produces 500-750 watts per meter of cavity length.

A CO_2 laser gas mixture is circulated, via a turbine, roots blower or vacuum pump, through an electrode structure, which creates electrical excitation of that mixture. The electrical excitation provides, via molecular collision, pumping of the CO_2 molecules which in turn can be stimulated to release optical energy to the laser beam. After the gas mixture passes through the discharge region it must be cooled to remove non-useable thermal energy. This cooling is achieved by passing the gas through gas-to-water heat exchangers while it is continuously recycled.

Situated on both ends of the discharge region are optical assemblies, which are held in a fixed position by a water-cooled resonator assembly. The mirrors mounted in these assemblies form an optical resonator, which reflects light back and forth through the discharge region with accompanying amplification on each pass. A portion of this circulating optical power is allowed to exit through an output mirror. This optical output is controlled either by electronic on-off shuttering of the discharge or absorbing the output with a water cooled shutter mechanism situated between the output mirror and output aperture of the cabinet.

In order to measure the output power of the laser, a small portion of the circulating resonator power is allowed to leak through the rear mirror onto a power meter. The output power is proportional to this rear mirror leakage. The laser beam is then directed by mirrors, through the focussing lens, to the work-piece.

Figure 3 – Laser Tube

Sealed Tube Lasers

Sealed, CO_2 lasers range in power from a few watts to 500 watts. The upper power range may increase in the years to come but is not likely to exceed 1 kilowatt. The reason for this upper power limit is size and manufacturing economies. High power lasers at the kilowatt and above range are for now the domain of flowing lasers, which require a continuous supply of gases and support equipment such as pumps.

Figure 4 - Synrad sealed laser

Sealed lasers require no supply of gases to operate. Their gas supply is internally contained and is continuously recycled, although after many years of service it may have to be exchanged. Typical gas lifetimes of Synrad lasers are a shelf life of 10 years and an operating "on" life of well over 10,000 hours of continuous operation.

The reason that sealed lasers are best suited for low power needs (<500W) and flowing lasers are best suited for kilowatt requirements lies in size and economies. The plasma of sealed lasers is cooled by diffusion, while the plasma of flowing lasers is cooled by gas exchanges. On a per watt basis, the laser cavity must therefore be longer in sealed lasers. While one could build a small low power flowing laser, such an effort would be futile since the gas handling support equipment would dominate both the size and cost aspect of the problem. On the other hand, building high power sealed lasers may not make sense since the size and economies of the large laser cavity would outweigh the savings in support equipment. The cross-over between the two approaches is somewhere between 300 watts and 1 kilowatt depending on assumptions and the constantly changing technology.

The cost on a "per watt" basis of delivered power is about the same in state-of- the-art sealed and flowing lasers. In general, the processing speed of materials such as plastics, wood, paper, or metals is directly proportional to laser power. Therefore, the required process speed determines the required power level. Of course, process speed differs widely between different materials. With a few exceptions, metal processing is currently the domain of high power flowing lasers, while non-metallic materials are primarily the domain of sealed lasers. The exception to the aforementioned rule is anodised or surface-treated metal, which is well suited for engraving or marking applications using sealed lasers.

The original sealed CO_2 lasers were sealed glass tubes filled with a $C0_2$ gas mixture. Resonator mirrors on each end were provided, and the plasma was excited with a source of high voltage to drive current through the gas along the length of the tube. Cooling was accomplished with a water jacket on the outside of the glass walls. While these tubes are still used by some manufacturers, the development of radio frequency excitation for C02 lasers in the late seventies has for the most part displaced that technology. RF excitation has been found to greatly increase the life of sealed off lasers, while also providing many other useful benefits. Not only has RF excitation become the standard for sealed lasers, it has also made significant inroads into flowing lasers at the multi-kilowatt level.

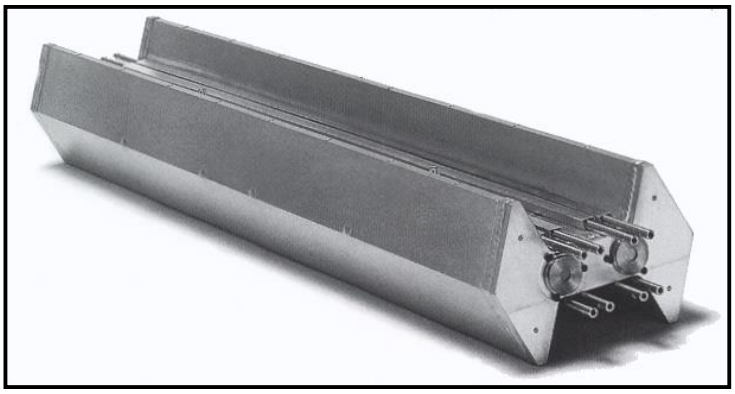

Figure 5 - Sealed laser cavity

The RF excited C02 laser was pioneered by Laakmann Electro-Optics in the late seventies and early eighties. These original RF excited lasers were "waveguide" lasers. They differed from the glass tube lasers in that waveguide lasers used a small cross-section bore to confine the optical energy. The laser excitation was created by a transverse electrical discharge of just a few hundred volts of RF potential. In contrast to the older glass laser which used "free space" resonator optics, these newer lasers utilised the guiding action of the wall. The waveguide lasers were quite small, rugged and featured relatively uncritical optical adjustments. Their beam quality was "diffraction limited", which means that the collimation was near theoretically perfect.

These lasers found very successful uses in surgery, engraving, plastics processing and military applications. In recent years, several companies have introduced sealed RF excited CO_2 lasers with output power in the 3 to 200 watt range. These lasers differ from their predecessors in their construction technique as well as in the optical configuration. Waveguide lasers are still being manufactured but have been superseded for most industrial applications by RF excited "free space" lasers or hybrid resonator types with features of both the waveguide and free space lasers. The following section will illustrate the differences between these lasers from a user's point of view.

All sealed lasers manufactured by the leading companies in the CO_2 laser business are nominally diffraction limited. The term "diffraction limited" means that the beam collimation is as good as it theoretically can be. However, the actual beam diameter varies between manufacturers and so does the degree of spurious (non-collimated) emission or percentage of higher order modes within the beam. In other words, the beam quality has a specified degree of imperfections which varies depending on vendor and technology. These imperfections in the beam may siphon off power or create a larger focused spot.

The primary differences between sealed lasers from different manufacturers involve the structure and composition of the plasma tube and the way it is sealed. The early Laakmann Electro-Optics lasers used a metal/ceramic structure to form the waveguide laser bore within the aluminium envelope which served as the gas reservoir. Other RF excited lasers subsequently developed by Laakmann Electro- Optics Inc. and others utilise an all ceramic structure, with the RF excitation energy applied through the walls of the ceramic plasma tube. Synrad pioneered a laser made from all aluminium components which are extruded and welded together. These lasers can be constructed as a "waveguide" laser by using a very small plasma bore. With larger bores, a "free space " geometry is approached where the bore walls have little influence on the beam. In the present Synrad design, a bore size (and exit beam size) midway between waveguide and free space type lasers is used.

There is no difference in laser performance as a function of beam size. However, lasers of different beam size are not necessarily interchangeable without a change of optics

Different manufacturers have developed various sealing techniques for the optics and fill ports. Some lasers are said to feature a hermetic "hard seal", while other lasers, such as those made by Synrad, use elastomeric seals. Both are techniques that can assure thousands of hours of operating life and at least 10 years of shelf life. A hard seal involves an impervious barrier of sealing materials that does not permit any gas leakage. An elastomeric seal has a finite gas leakage rate that sets a limit on shelf life before gas exchange is required; however, this type of seal offers other benefits.

Hard seals involve brittle materials that have a significant failure rate and which complicate the optics replacement procedure. Elastomeric seals feature very high reliability and low field failure rates. Optics can be replaced easily and the production cost of lasers is much lower. Lasers with elastomeric seals can be vacuum processed at much higher temperatures than those with hard seals, since the optics and seals are added last. However, the price to be paid for these advantages is that a gas change must ultimately be performed. This point is typically reached after the gas mixture is depleted, so that in practice there is no real difference between a hard seal laser and one with elastomeric seals. Both need gas changes between about 2 and 10 years of operation depending on the manufacturing technology and field use.

Figure 6 - Laser on robot

Conventional sealed lasers have either a circular or square bore and deliver approximately 2.5 watts per cm of bore length (1 watt per inch). Sealed lasers with rectangular or segmented bores can exceed these figures. At a power level between 25 and 50 watts, the cavity length becomes too long to be practical for most uses. This problem is solved by folding the active laser cavity two, three or more times using turning mirrors. The other method used to minimise cavity length while increasing output power is to use two or more lasers in parallel and combine the beams optically. If the sealed lasers are linearly polarised, two lasers can be combined optically using a polarisation sensitive beam combiner. However, more than two beams can not be combined in this way without significant optical penalties.

Another difference between sealed lasers from different manufacturers is the mechanical configuration, including cooling provisions. At the low power end of sealed lasers, some units are available with forced air cooling. However, most sealed lasers over 50 W of output power require water cooling.

Slab / Array Lasers

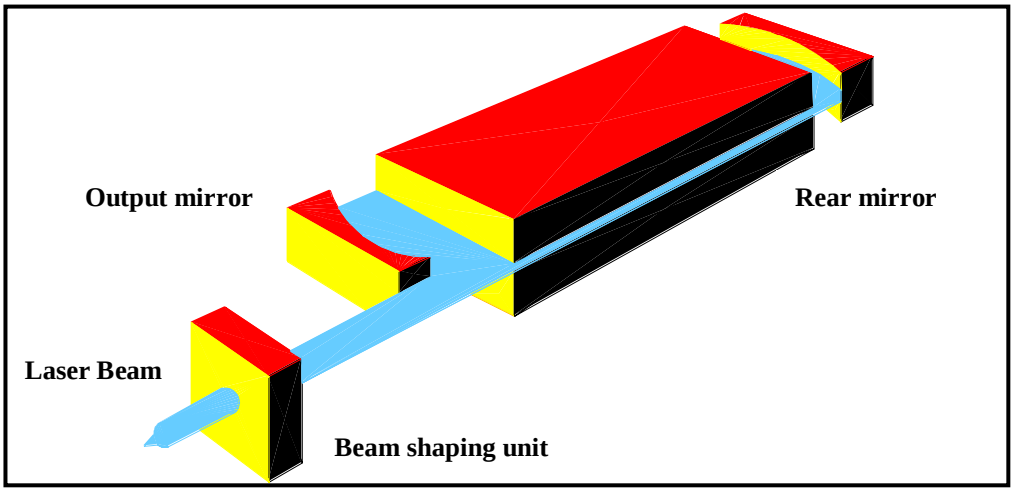

Figure 7 - Slab laser

Relatively new on the sealed laser scene are RF excited lasers that use a rectangular plasma discharge cross-section rather than the commonly used square or circular laser sections discussed so far. These lasers can deliver more power per unit length than the lasers discussed earlier, thus avoiding the need for folded structures. In these newly developed lasers, the RF discharge takes place in the narrow dimension of the rectangular cross-section. While lasers of this type can generate higher powers, severe complications are encountered in creating a high quality diffraction limited beam. Without special optics, these lasers deliver higher order modes and therefore are not capable of producing a fine focused spot. Relatively exotic resonator optics, having aspheric and cylindrical properties have been developed for these lasers to regain acceptable beam quality.

Another method of extracting a large amount of laser power from relatively short structures is by means of an array of parallel bores. For example, a rectangular discharge section as discussed above can be divided into multiple square bores by means of ceramic dividers. Common resonator optics can be used to generate an array of parallel "diffraction limited" beams. Diffusion cooling of the plasma is superior to that of "slab" lasers, since there are more surfaces to conduct heat. Specific power output per unit length or discharge area is therefore higher. This technique is similar to the use of arrays of visible LED's to increase total power.

While these laser arrays are useful for some applications, they do present their own set of problems compared to the conventional sealed lasers. On the positive side, they feature a very high power output per unit length and utilise relatively simple optics, yielding a very small and economical package. On the negative side, there are focusing difficulties with this design that may or may not be significant for a particular application. With proper optics, the parallel beams from the array will focus to a single diffraction limited spot; however, the depth of focus is reduced. Depth of focus can be restored to that of conventional lasers, but it comes at the expense of having to work with an array of focus spots.

Fiber Lasers

Laser cutting is one of the biggest applications of lasers in materials processing. They are used in cutting a variety of materials such as metals, non-metals and organics. The wavelength, power, beam quality and spot size are some of the parameters that determine the cutting dynamics. Pulsed lasers are used for fine cutting of thin metals and CW lasers are used for cutting a wide range of material thickness.

Ytterbium fiber lasers operating at the 1070 nm wavelength are perfect for laser cutting. The operating wavelength, multikilowatt power, good beam quality, wide operating power range, power stability, small spot size are some of the qualities the fiber lasers offer for most cutting applications. Fiber lasers have wide dynamic operating power range and the beam focus and its position remain constant, even when the laser power is changed, allowing consistent processing results every time. A wide range of spot sizes can be achieved by changing the optics configuration. These features enable the end user to choose an appropriate power density for cutting various materials and wall thickness.

The high mode quality and small spot size of the fiber laser with optimized pulses facilitate cutting of intricate features in thin material. This pulsed mode-cutting results in minimal slag and HAZ, which are very critical to many micro-machining applications. High power density associated with small spot sizes of the fiber laser also translates into faster cutting with superior edge quality. Examples with pulsed cutting with the fiber lasers include cutting cardiovascular stents, silicon wafers for solar panels, stencil cutting etc. The high power multimode lasers are typically used for CW cutting of thin sheets to heavy plate for variety of applications. The large depth of field and small spot sizes results in small kerfs and straight walls even in thick metals. Common applications with the high power multimode lasers include 3-D cutting of automotive body parts such as hydroform tubes, high temperature steels. Cutting riveting holes in alloys of aluminium and titanium for aerospace applications, cutting thick plates for the shipbuilding and steel industries.

The low-order-mode kilowatt class fiber lasers range in power from 500 W to 50 kW, operating in CW or modulated modes up to 20 kHz with wall-plug efficiencies greater than 30%. The dynamic operating range of these devices is available from 10% to full power with no change in beam divergence or beam profile throughout the entire range. This allows a single laser to be utilized for both high and low-power applications such as welding, drilling and precision cutting, a previously unheard of capability.

Fiber lasers' divergence specifications are far superior than other lasers and allow the use of long focal length processing lenses for vastly improved depth of field, less damage to optical components and are ideal for remote welding applications. The units can be supplied with fiber lengths to 100 meters, different fiber diameters and variety of multi-port beam switches, beam couplers, termination optics and scanners.

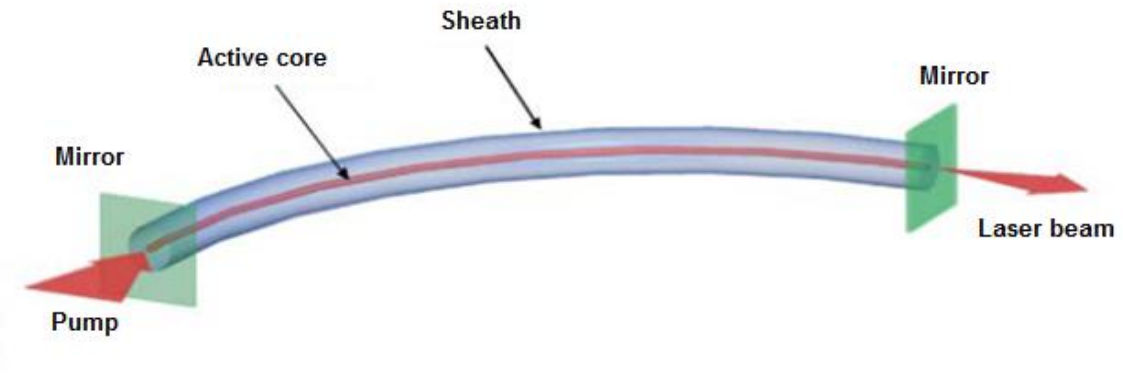

Fiber lasers deliver their energy through an integrated flexible optical fiber. Fiber lasers have a monolithic, entirely solid state, fiber-to-fiber design that does not require mirrors or optics to align or adjust. These features make fiber lasers easier to integrate and operate in production, medical and other laser-based systems.

Fiber lasers are typically smaller and lighter in weight than traditional lasers, saving valuable floor space. While conventional lasers can be delicate due to the precise alignment of mirrors, fiber lasers are more rugged and able to perform in variable working environments. These qualities permit fiber laser systems to be transported easily.

The fiber laser is modular, built from multiple laser units, each one generating hundreds of watts of output power. This also allows the laser system to incorporate reserve modules and power margins. The redundant module feature is available in the some series of high power lasers. If something should happen with a regular fiber laser module it will shut off and allow the redundant module to start automatically, leaving the laser with no output power loss. An alarm would then be activated notifying the user that a modular requires service but still allowing the laser to operate under normal circumstances.

CHAPTER 3

Optics

MIRRORS

In any CO_2 laser system, mirrors are among the most critical components. The design and manufacturing quality of the laser's mirrors are crucial to generation, maintaining and delivering a high-quality laser beam. There are two main categories of laser mirrors: internal and external.

Internal mirrors are used to generate, maintain and amplify the laser beam by forming a reflective "resonator" around the excited CO_2 gas mixture. Internal mirrors are sometimes called resonator or cavity mirrors.

External mirrors are used to deliver, manipulate and focus the laser beam. Most mirrors have flat reflective surfaces, but some have curved surfaces designed to reduce beam divergence. The design of the substrate material and coating of a CO_2 laser mirror is primarily determined by its intended function.

SUBSTRATES

For CO_2 lasers, several substrate materials are available. Silicon is used on low to medium power systems when cost is a big consideration. Copper, with its superior thermal conductivity is used for very high-powered systems. Molybdenum is used in dirty environments where durability and repeated cleanings are required.

INTERNAL MIRRORS

Output couplers

Also known as front mirrors, output couplers are designed to reflect a portion of the beam back into the laser resonator for continuous amplification while transmitting a portion of the beam to the outside for use. Therefore, the substrate material must be transmissive at the required wavelength of 10.6 microns. Germanium and Gallium Arsenide substrates are commonly used for low to medium powered systems. The more expensive Zinc Selenide material is required for higher-powered lasers because of its lower absorption at 10.6 microns.

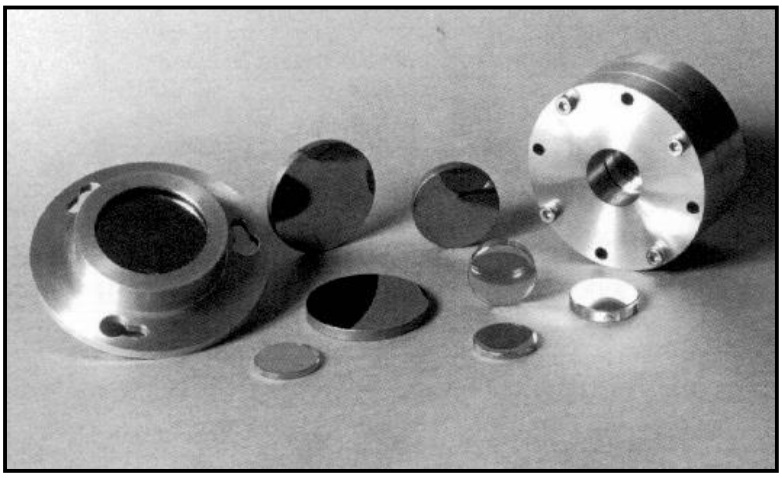

Figure 8 - Output couplers

Rear mirrors

Rear mirrors are designed to reflect all or nearly all of a laser beam back through the laser gas mixture for amplification. The inside surface is given a highly reflective (99-100%) coating. In the 100% reflective case, silicon can be used as the substrate material and the outside surface does not need polishing or coating. Some rear mirrors, however, are designed to transmit a small (0.5-1.0%) percentage of the beam to a power detector for real-time beam monitoring. These mirrors must have a tranmissive substrate and the outside surface usually has an antireflective coating.

Fold mirrors

Fold mirrors are used to lengthen the resonator beam path to increase power without physically lengthening the entire system. They are usually made from silicon substrates and have highly reflective coatings. In very high-power systems, copper substrates are used because of copper's superior thermal conductivity.

EXTERNAL MIRRORS

Fold Mirrors

Standard bending mirrors are used to direct the laser beam towards the work piece. A 90° bend (45° angle of incidence) is most common, but other angles can be used. Reflectivities approaching 100% at the desired wavelength are common.

Polarising Mirrors

Circular polarising mirrors are a special type of bending mirror which convert a linearly polarized beam into a circularly polarized beam. Simply speaking, every laser beam has an associated electric field. The orientation of this electric field with respect to the direction of beam propagation can greatly affect how the focused beam cuts or welds a particular material. In most CO_2 laser systems, the electric field of the output beam is oriented in a plane at 45o from the horizontal or vertical. This is known as 'S' or 'P' linear polarization. A linearly polarized beam will interact differently with the work material depending on the direction of travel. For instance, it may cut nicely in the X direction but yield excessive burring or a non-perpendicular kerf in the Y direction. For consistent cutting or welding in all directions, a circularly polarized beam is required. Quarter-wave and eighth-wave circular polarizing mirrors were developed for this purpose.

Phase Shift Mirrors

Zero phase shift mirrors are used when additional bends are required in the beam path after a quarter-wave mirror. Standard bending mirrors should not be used after a quarter-wave mirror because they will "shift the phase" or alter the beam's polarization phase angle. These mirrors are usually made from silicon substrates (copper is used in very high-power applications). Zero phase shift coatings are the highest reflectivity, lowest loss coatings available for CO_2 laser optics. Polished Molybdenum is a natural zero phase shift mirror and does not require coating.

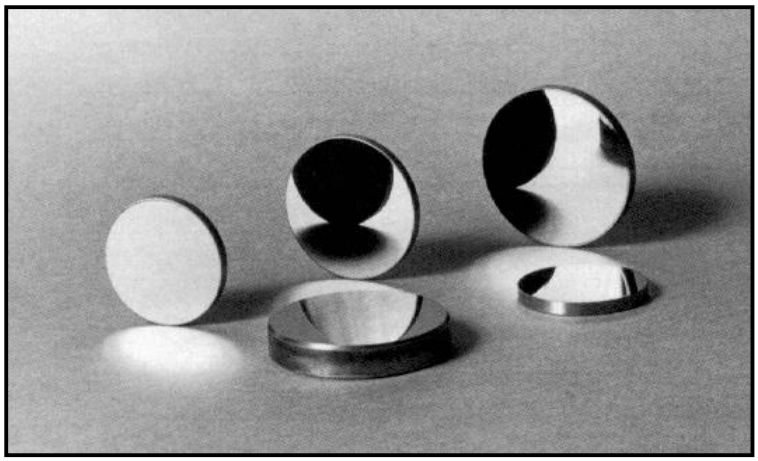

Figure 9 - Zero phase shift mirrors

LENSES

Lenses

Lenses are used in CO_2 laser systems to focus all the beam's power into a very small spot. Small, focused spot size is important for a couple of reasons: cutting and welding call for high power density, and power density is a strong function of spot size (reduce the spot diameter by 50% and the power density increases by 200%). The variables that affect the performance of a CO_2 laser lens are focal length, diameter, shape, material and coating.

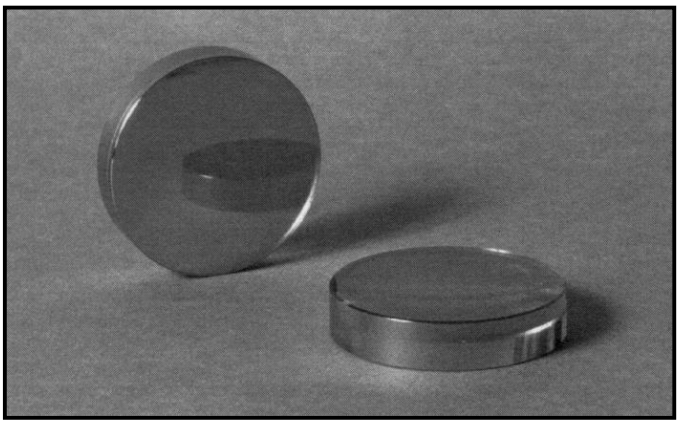

Figure 10 - High pressure ZnSe lenes

Focal length

The focal length affects both spot size and depth of focus. In general, a shorter focal length will produce a smaller focused spot and a shorter depth of focus. Usually, the specified focal length is a compromise between desired spot size, penetration depth and work piece clearance.

Lens diameter

The lens diameter is important for two reasons. Higher power lasers require larger diameter lenses to prevent thermal overload. Also, at any given focal length, a larger diameter lens will yield a smaller focused spot if the incoming beam is expanded to fill the larger lens.

LENS SHAPES

Plano-convex

The plano-convex is the simplest lens shape. It is used in such applications as welding where achieving the smallest spot size is not critical or at relatively long focal lengths when more complex shapes would not be beneficial. A plano-convex lens should be oriented with the flat side toward the work piece and the convex side toward the laser.

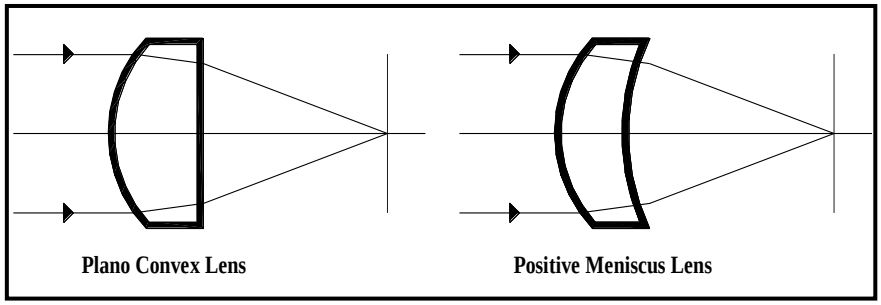

Figure 11 - Lens types

Meniscus

Meniscus lenses have a concave curve on one side and a convex curve on the other. At relatively short focal lengths, a meniscus lens will yield a smaller focused spot than a plano-convex lens. However, meniscus lenses are more expensive to manufacture than plano-convex lenses because both sides are curved. A meniscus lens should be oriented with the concave curve toward the work piece.

LENS MATERIALS

Zinc Selenide (ZnSe)

Zinc Selenide has the lowest absorption of the common CO_2 transmitting materials and is, therefore, the material of choice for high power applications. It is also the only material that transmits visible light.

Gallium Arsenide (GaAs)

Gallium Arsenide is the material of choice in dirty or high-spatter environments. It has relativity high hardness which helps it repel debris particles. It also has high thermal conductivity which helps transmit heat away from imbedded particles.

Germanuim (Ge)

Germanium can only be used in low power applications because it is subject to thermal runaway. As temperature increases, its absorption increases, which leads to thermal failure in high power applications.

CHAPTER 4

Laser Cutting

LASER CUTTING THEORY

In order to understand what makes a laser suitable for cutting, one must distinguish its unique features in comparison to ordinary light.

Conventional light produces waves which radiate out in all directions to fill up and illuminate a wide area. The energy intensity rapidly decreases as one moves away from the source, just as the sun's intensity diminishes when it finally reaches the earth.

The laser on the other hand provides a stream of collimated, coherent light waves which give it exceptional intensity and direction ability. Lacking the dispersion of conventional light, a laser can be easily projected as a beam over relatively long distances while maintaining nearly all of its useful power output.

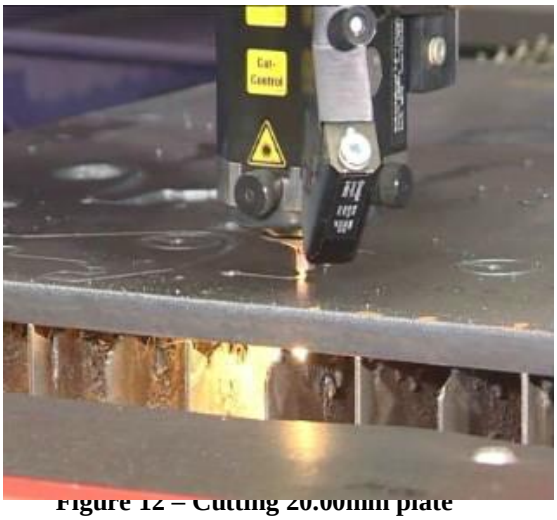

Figure 12 – Cutting 20.00mm plate

The use of lasers for cutting can be thought of in the same way as that of focusing sunlight with a magnifying glass to produce a concentrated source of heat energy. While this method only results in a few burned holes in paper, it gives us an illustration that light is indeed a source of energy with potential material processing capabilities.

A laser can be used for cutting by exposing material to the intense heat energy developed by its beam. If that heat input to the material is greater than that material's ability to reflect, conduct, or disperse the added energy, it will cause a sudden rise in temperature of the material at that point. If the temperature rise is substantial enough, the input heat is capable of initializing a hole by vaporizing the material. The linear movement of this intense heat energy with respect to the material provides cutting action.

In most cases the "raw" (unfocused) beam of even high power (multi-kilowatt) industrial lasers has inadequate energy to do much more than slowly heat a surface. Therefore, the beam is directed through a focusing lens. This allows the energy to be concentrated into a spot of less than 0.25 mm thus producing power densities of over a million watts per centimeter squared, capable of vaporizing many materials.

While intense heat is capable of vaporising material, the control of that heat is essential in determining quality. The key performance features of a laser are those beam characteristics that affect the resultant power density as it is directed onto the workpiece.

Mode

A cross-section of a laser's beam profile is commonly referred to as mode. Described in terms of TEM (Transverse Electromagnetic Mode) mode relates to the beam's ability to be focused. It is also comparable to the degree of sharpness of a cutting tool. The lowest order or reference mode is TEM_{00}, of which the beam's profile simulates a Gaussian distribution curve. Modes which approach this energy distribution can be focused down to the laser's theoretical minimum_spot size and give the sharpest energy density.

Figure 13 - TEM_{00} mode

Figure 14 - TEM_{01} mode

Higher order or multi-mode beam profiles are characterised by a tendency to spread out the energy distribution away from the centre of the beam. The resultant spot is large with this mode causing lower energy concentration. Therefore, higher order mode lasers are considered to be duller cutting tools than low order mode lasers of equivalent power output.

Power Output

Lasers are rated by their power output in terms of watts. Since laser cutting is a thermal process, the amount of heat produced relates to its capabilities. Whereas a 300 watt laser with a high quality output is more than adequate for the cutting of paper products, it lacks the heat producing capabilities to effectively couple into aluminium. Given all other considerations being equal (eg power distribution, spot size, etc), increased power allows for faster processing speeds and the ability to cut thicker sections of materials.

Stability

Since quality results are obtained by the application of consistent energy, the stability of the laser's output is a key feature in cutting. This includes maintaining unwavering output energy (power stability), consistent beam quality (mode stability), and fixed energy concentration (pointing stability). Should the power increase or decrease by more than a few percent over the short term operation, the beam quality oscillate between a Gaussian and multi-mode profile, or the location of the beams direction shift more than a few tenths of a milliradian due to the outputs instability, there will result a noticeable change in the available power density for cutting.

Polarisation

Particularly evident in metal cutting and ceramic processing, studies have shown that random occurrences of inconsistent edge quality, namely variations in kerf, edge smoothness, and perpendicularly, are attributable to the effects of polarisation. Uncontrolled or random polarisation is characteristic of most standard material processing lasers. It can unpredictably affect the relative degree of absorption of the beam's energy that is coupled into the material at a given moment. To correct this inconsistency, lasers can be equipped with optical packages which either fix the polarisation to be aligned in the same direction of the cutting action or circularly polarise the output to give equivalent coupling regardless of the direction travel.

An important asset of laser cutting is the high level of control which is available over the variables affecting the process. The cut can be tailored to meet the exact requirements of the job and the results can be readily duplicated. The principle parameters are:

Speed

Laser cutting feedrates have been found to fit empirical formulas based on the available laser power density and the properties of the material to be cut. Above a threshold amount, the feedrates are directly proportional to available power density which takes into account the laser's performance features (eg power, mode) in addition to the focusing system's characteristics (eg spot size). Cutting rates are likewise inversely proportional to the materials density and thickness.

Feedrates can be varied for a particular set of parameters in order to obtain different edge quality results, particularly for metals, the plot of cutting speed versus thickness for a material has two curves. The upper curve reflects the top speed at which through cuts are achieved while the lower curve shows the limit below which the material is self burning. The resultant window of acceptable cut speeds is usually wider at the thinner range of a material.

Focusing Lens

Since speed is a function of available power density, the choice of the focusing lens has a great impact on the resulting cut quality. Imaging of lasers beams is usually accomplished with transmissive lenses of focal lengths ranging from 2.5 to 10 inches. Because the focused spot size is proportional to the focal length, the power density that is produced is proportional to the square of that length. Short focal length lenses give very high energy densities, but are limited in their application due to a shallow working depth. They are appropriate for use with thin materials and in high speed operations where the material can be held within the limited depth of field. Longer focal length lenses have lower power densities but are able to maintain those densities over a much broader range and therefore can be used for thicker cross sections of materials given that they have enough energy initially.

Focal Point Position

During the laser cutting process, the focal point of the lens should be consistently positioned in order to provide the best cutting results. In most cases, the focal point is positioned at or slightly below the surface of the material. Above or below this point the power density will taper off until it is insufficient to produce an effective cut. Cutting systems that employ short focal length lenses must ensure constant monitoring of the lens-to-workpiece distance.

Assist Gas

Recall that assist gas is supplied coaxial with the focused beam to protect the lens and aid in the material removal process. Generally, compressed air or inert gas is used to purge melted and evaporated material from the cut zone while minimising any excess burning. For most metal cutting applications, a reactive gas assist can be employed to promote an exothermic reaction. The enhanced energy intensity from the use of oxygen can improve cutting speeds by 25% - 40% over the results obtained with use of air.

In addition to gas type, delivery pressure is an important consideration. Typically, pressures of 45-60 psi (3-4 bar) developed in the gas jet nozzle are used in cutting thin material at high speeds to help prevent the clinging of slag or dross to the back edge of the cut. The pressure is reduced as the material thickness increases or process speeds slow.

LASER CUTTING PROCESS

Laser cutting systems combine the heat of the focused beam with assist gas which is introduced through a nozzle coaxial to the focused beam. The high velocity gas jet serves to:

1) Aid in material removal by blowing out excess material through the backside of the workpiece

2) Protect the lens from spatter ejected from the cut zone

3) Assist in the burning process.

The best example of the chemical effect of the assist gas is the use of oxygen for the cutting of steels where performances are increased by the exothermic reaction of combustion of iron in oxygen. Another example is clean cutting stainless steel with high pressure nitrogen. As the stainless steel is cut by the laser beam, the high pressure nitrogen blows the melted material away.

While carbon dioxide lasers are capable of generating tremendous heat intensity, it is an incorrect assumption that they are capable of vaporising and cutting all known materials. Rather, each material has its own unique response, some of which are not suitable, to the effects of $C0_2$ lasers. Therefore, the question of suitability of using a laser for cutting that material hinges on how well it handles the added energy input. That interaction is dependent upon three key factors of the material.

1) Surface condition - how well it initially absorbs the energy

2) Heat flow properties - its coefficients of thermal diffusivity and conductivity

3) Heat phase-change requirements - the amount of excess heat required to induce a change as a function of the materials density, specific heat, and latent heat of vaporisation.

The following information is intended to provide general inputs on the major categories of materials, keeping in mind these factors.

NON-METALS

In general, non-metallic materials are good absorbers of infrared energy as produced by a $C0_2$ laser. Likewise, they are generally poor conductors of heat and have relatively low boiling temperatures. As such, the energy intensity of a focused beam is almost totally transmitted into the material at the spot and will instantly vaporise a hole.

ORGANICS

Plastics (Polymers)

Lasers have found their way into many plastic machining operations because of their ability to cut complex geometrise, at high feedrates without contacting the workpiece. Since the laser is an intense heat source, it uses its energy to vaporise the binder and quickly breaks down the material's polymer chains.

Thermoplastics with relatively low melting temperatures typically display clean cuts with fire-polished edges as a result of resolidified melting. Process control can be exercised to minimise or eliminate bubbling or the presence of small burrs on the backside of the cut.

As the tensile strength of the polymer increases, there is a correlation to a marked increase of charring present along the cut edge. Greater energy intensity per unit time is required to break the stronger chains and therefore leads to a burning action. Reasonable results have been obtained with polyester and polycarbonate while there is generally a substantial layer of decomposed material along the edge of phenolic, polyamides, and PVC.

As a caution, in the cutting of some polymers, specifically lucite, and PVC, careful attention must be directed at the containment and appropriate filtering of potentially hazardous and/or corrosive fumes that are generated as the result of burning.

Composites

New lightweight, fibre reinforced polymers are difficult to machine with conventional, cutting tools. This has led many users to the non-contact cutting capabilities of a laser. Prior to the curing of laminates stacks, thin prepreg sheets in thicknesses up to 0.5mm can be trimmed or sized at speeds up to 40 metres per min without gumming up a cutting tool. The heat from the lasers cutting action fuses the edges, thus preventing fraying of the fibres.

For thicker sections and fully cured composites, particularly boron and carbon fibre material, there is a higher probability of charring, and thermal damage along the cut edge, thus reducing the acceptability of laser cutting for structural members. As with the cutting of polymers, care should be exercised in the removal of fumes.

Rubber

Both natural gum and synthetic rubber materials in thicknesses up to 19mm readily vaporise from the heat of a focused laser beam. This allows precision sizing of items such as gaskets.

Material with fibre or steel cord reinforcement can be cut with a laser at considerably slower speeds due to the higher energy intensity per unit time necessary to sever the cords.

The advantage of laser cutting is the simplicity of handling without having to worry about stretching or distorting of the material due to the impact of a cutting tool. Fresh cut samples tend to exhibit slight stickiness along the edge so they require care in post-process handling. Additionally, some rubber, particularly those containing carbon black, may require a clean-up operation to wipe clean any edge charring.

Wood

The laser offers a number of attractive advantages for the cutting of timber, plywood, and particleboard. In particular, it provides narrow kerfs of 0.3-0.8mm, the absence of sawdust, the ability to contour cut in any direction and no tool wear and noise. While the use of a laser likewise eliminates rough, torn-out, and fuzzy edges as evident with conventional sawing techniques, it is characterised by "burned" edges produced by the laser's heat. Greater amounts of charring result when the material thickness increases thereby slowing the cutting feed-rates.

While lasers are routinely cutting slots in dieboards for mounting of steel rule dies their acceptance for other industrial applications has been hampered by process limitations and relatively high initial cost. Since practical power outputs are limited to a few kilowatts, lasers are limited in their ability to cut up to 75mm thick for timber and 25mm for particleboard and plywood.

Other Organics

Paper products and leather, as well as natural and synthetic textiles, can easily be cut with a laser. The lack of thickness; coupled with their high combustionability minimises the power output requirements of a laser to no more than a few hundred watts. The resultant edges are clean and free from fraying.

INORGANICS

Quartz

Since it has a relatively low co-efficient of thermal expansion, quartz responds well to the cutting action of a laser. Though there is the presence of a shallow heat affected zone adjacent to a cut, the resultant edges are crack-free and have a smooth appearance thereby eliminating clean-up operations required by saw cutting. Thicknesses up to10mm can be cut at speeds that are a couple orders of magnitude greater than sawing and without imparting force to the workpiece.

Glass

As opposed to quartz, most types of glass are prone to thermal shock and are therefore generally not suitable candidates for laser cutting. The instantaneous heat of the laser's beam provides cutting action by both vaporisation and the blowing away of molten glass from the cut zone.

Some materials such as boro silicates have low co-efficients of expansion and, with adequate head cycling, can tolerate the heat input from a laser. However, most other forms of glass including soda lime experience thermal shock which results in crack propagation along the cut edge. Also, based on the reflow characteristics of the particular glass, there will be varying degrees of resolidified material that will adhere to the edges and underside of the cut.

Stone & Rock

While they tend to absorb the heat energy from a laser, granite, concrete, rock, stone and various minerals are not suited for laser cutting. The explosiveness from heating moisture within the materials can lead to undesirable cracking. Aside from the lack of uniformity in their structures, stone and rock are typically found in thicknesses greater than 25mm, far in excess of the practical depth. of field of useable focussed laser energy.

Metals

Although at room temperature, almost all metals are highly reflective of infrared energy, the $C0_2$ laser with its 10.6 micron wavelength (far infrared) is successfully employed on many metal cutting applications. The initial absorptivity can range from only 10% to as little as 0.5% of the incident energy. However, the focusing of a beam to provide power densities in excess of 1 million watts per square cm can quickly (in a matter of microseconds) initiate surface melting. The absorption characteristics of most metals in their molten states increase dramatically, raising the absorptivity of energy to as much as 60% - 80%.

Carbon Steel

Conventional steels of up to 25mm lend themselves reasonably well to oxygen assisted laser mating. The kerfs are narrow (as little as 0. 1 mm for thin material) and the resultant heat affected zones are negligible, particularly for mild and low carbon steel. At the same time, the cut edges are smooth, clean, and square.

It has been found that the presence of pockets of phosphorus and sulphur within mild steel can cause burnout along the cut edge, As such, the use of low impurity steels (eg cold rolled) will result in improved edge quality over results obtained with hot-rolled material. A higher carbon content within the steel does yield a slight improvement in edge quality, yet will make the material subject to an increased HAZ.

Stainless Steel

Lasers have been shown to be viable cutting tools for the fabrication of sheet metal components made from stainless. The controlled heat input of the laser beam serves to minimise the HAZ along the cut edge, thereby helping the material to maintain its corrosion resistance. Since stainless does not react with an oxygen assist as efficiently as does mild steel, cutting speeds for stainless are slightly slower than those for comparable thicknesses of plain steel. At the expense of up to 50% of the speed for oxygen assisted cutting, an inert assist gas can be employed to obtain a "weld ready", oxide-free cut edge.

As for the resultant cut quality, martensitic and ferritic (400 series) stainlesses provide clean smooth edges. The presence of nickel within austenitic (300 series and precipitation hardened) stainless steels affects the energy coupling and transfer within the material. Specifically, the viscosity of molten nickel generated during the cutting action causes it to migrate and adhere to the backside of the cut. While the use of high velocity gas jets can effectively eliminate slag for material up to 1.0 mm thick, slag deposits up to 0. 5mm are generally present on thicker cross sections.

Alloy Steel

Since care is taken to control the amount and distribution of additives to the base iron, most alloy steels are considered ideal candidates for the laser cutting process. High strength materials such as AISI-SAE 4130 (chrome moly steel) and 4340 (chrome nickel moly steel) display exceptional laser cut edges that are square and clean.

Tool Steel

Similar in many ways to allow steels, most tool steels respond reasonably well to the cutting action of a laser. The most notable exceptions are the tungsten high speed (Group T) and tungsten hot work (part of Group H) materials which retain heat in a molten state, thereby resulting in burned out and slaggish cuts.

Aluminium Alloys

Due to its high thermal conductivity and high reflectivity to a $C0_2$ laser's wavelength, aluminium requires considerably higher laser energy intensity in order to initiate cutting compared to steel. This means the need for a laser possessing exceptional beam quality and capable of outputting at least 500 watts, in addition to precise focus control. Due to the reduced coupling efficiency, even 1-2 kilowatt lasers are limited to cutting of thicknesses under 3.8mm.

During the cutting process, the assist gas serves primarily to blow the molten material from the cut zone. This helps to produce edge quality that is generally superior to that produced by a bandsaw. However, the melted material tends to flow along the edge and cling to the backside of the cut. While this slag is easily removable, there are intergranular cracks emanating from the cut surface on some alloys. Concern over the presence of this micro-cracking has prevented the use of lasers for manufacturing structural components such as aircraft.

Copper Alloys

Copper has less ability than aluminium to absorb energy from a CO_2 laser. Due to its high reflectance, copper generally cannot be cut. Brass on the other hand can absorb some energy. It essentially behaves like aluminium with slag adhering to the backside of the cut. The wavelength of Fiber lasers is not as reflective and cuts copper well.

Titanium

Pure titanium responds well to the concentrated heat energy of a focused laser beam. The use of an oxygen assist enhances the cutting speeds but tends to promote a larger oxide layer along the cut edge. Aircraft alloys such 6AL-4V do tend to exhibit some slag that adheres to the bottom side of the cut but is relatively easy to remove.

Primary Considerations

This section discusses the criteria which are important to successful cutting. It is intended as a guide only, since there is no substitute for operator experience.

These are the principal considerations with which the operator must concern himself at all times. Note that the various items are not independent; it is the combined effect of these adjustments which determines the results.

Laser Power Setting

The most important point regarding laser power is that maximum power is not necessarily beneficial. Firstly, there is some trade-off between power and mode - the mode (or quality of the beam, which determines the fineness of the focus) is of significantly greater importance to cutting than the power level. Secondly, limiting the power is frequently beneficial in terms of reducing thermal input into the material - especially when cutting thin material, or materials which can be adversely affected by excess heat. It is simply wasteful to use more power than necessary.

Cutting Speed

The actual feedrate in use for a job will directly affect the cutting results; the feedrate is decidedly a function of the type of material and material thickness to be used. In any particular case, there will be some feedrate which is too high and the cut will simply fail to penetrate the material fully; at the other extreme, excessive heat input is likely to damage the material adjacent to the cut. In general, some feedrate closer to the maximum limit will be optimum, but always the choice is made experimentally on the basis of cutting results; the operator, with a little experience, can make this determination quite readily, making use of the feedrate override control.

Focal Height

Focus assemblies provide support for the lens in order to image the beam. These assemblies generally provide means to adjust the focal point in or at the part. Height sensing devices can be incorporated to automatically maintain the proper focal point position regardless of undulations in the workpiece surface. These devices measure the lens-to-workpiece spacing either through contact probes riding on the workpiece surface or via a comparison of non-contact optical, acoustic, or electrical (inductance or capacitance measuring) signals bounced off the material. The feedback can trigger compensation of the vertical axis position.

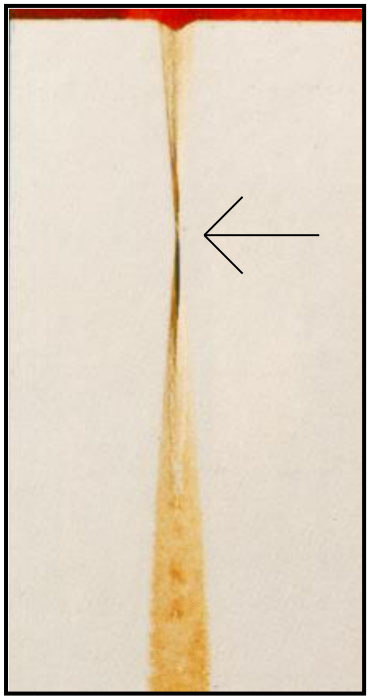

For best results, the focal point of the beam must impinge on the surface of a workpiece. This factor is of greater or lesser importance, depending on the material; in general, materials which have a high intrinsic reflectivity to the laser beam will be most critical of the focal height setting (eg. mild steel 45% reflective; stainless steel 66%; aluminium 99%). The focal point on aluminium and stainless steel should be approximately 4/5 buried into the material. Thicker carbon steel will cut better when the focal point is 1-2 mm above the material.

Nozzle Lateral Adjustment (Spot)

Gas jet nozzle assemblies are usually integrated with the focusing assembly below the lens in order to develop the desired gas assist. A properly designed nozzle tip is very important to the cutting process. It can promote higher feedrates, and better quality with minimum gas consumption.

Nozzle adjustment is an important factor, ensuring that the beam emanates centrally through the orifice. Misalignment of the nozzle normally causes noticeable variations in cut quality with respect to the direction of the cutting traverse. Severe misalignment results in the laser beam hitting the inner walls of the nozzle, with consequent poor cutting performance, and heating of the nozzle and surrounding assembly.

The nozzle adjustment must be made whenever a lens is changed, or even if a lens is removed temporarily for cleaning. During a working shift, the operator might "tweak" this adjustment a few times; the slight changes in pointing angle of the beam (through the external optical system) account for this requirement.

Current machines have the ability to automatically change the nozzle, align or centre the beam with the nozzle, change the cutting head fitted with different focal length lenses.

Secondary Considerations

These are considerations with which an operator must become concerned when cutting results are below expectations, and all primary considerations (listed above) have been checked.

Choice of lens

As a general rule, the most sharply defined focal point is produced by the shortest focal length lens (5"). Thus, the 5" lens is used when maximum intensity is important - that is, cutting materials with high intrinsic reflectivity (metals). In practice, there is only a slight (but usually

noticeable) difference between a 5” lens and a 7.5 lens in this respect.

The longer focal length is required, however, to achieve parallel sided cuts in some materials when the material is reasonably thick. For example, to cut 1” thick acrylic, it is found virtually impossible to keep the sides of the cut parallel with the 5” lens, whereas the 7.5” lens makes this quite easy. Note that the choice of laser power, assist gas pressure, and feedrate all combine to influence the cut quality in this respect, apart from the lens itself.

Condition of the lens

Cleanliness of the lens is of major importance, since any contaminants on its surfaces will cause it to absorb energy and become warm. Thermal distortion in the lens inevitably produces fuzziness in the focal point of the beam, and consequent reduction in cutting performance. Eventually, if a lens becomes excessively heated, thermal stress and gas pressure will cause it to shatter.

The operator should inspect the lens regularly (and clean as necessary). In fact, common sense is the rule here; the source of contamination is virtually always airborne particles produced by the cutting. Therefore, if material being cut produces contaminants (eg. sheetmetal often has oil on the surface; rubber produces black smog when cut; etc.), the lens should be inspected as often as convenient. The assist gas greatly helps in keeping contaminants away from the lens, but the operator must be aware that this is by no means total protection. Lifting the focal height while piercing will also help protect the lens.

Condition of the nozzle

The copper nozzle may become damaged or blocked in time, usually as a result of hot metal spatter thrown up from the work surface.

After some usage, the orifice may become "out of round"; this causes swirling or vortex action in the assist gas jet which usually produces highly directional effects in the cutting. If the orifice is of large diameter then excessive assist gas will be consumed. Eventually, the nozzle will need replacing.

External Optical Alignment

The optical system (set of mirrors) external to the laser cavity (including the mirror mounted at the top of the Beam Control Unit) should normally be checked and adjusted as part of the preventative maintenance program. However, if the integrity of the alignment is under suspicion in the meantime, it can be checked by using the cross-wire method, allowing the raw beam to pass through the system onto a target. The image produced by the cross-wire (its shadow) will indicate whether the beam passes through the position centrally.

Misalignment of the external beam will generally cause haphazard cutting results, with highly noticeable directionality.

Assist Gas Pressure

Generally oxygen is used for metal cutting, and air is used for non-metal cutting. High pressure nitrogen can be used to cut mild steel, stainless steel and aluminium. Using nitrogen as an assist gas leaves the cut edges clean and free of dross but is expensive because up to 25 bar is needed. The general rule with assist gas is: there must be sufficient flow (pressure) in each case, but an excessive amount is wasteful. Normally, the thicker the material, the greater the required pressure. Of course, the type of material is also an influence; very low carbon steel, for example, will be adversely affected by excessive oxygen flow since it is highly reactive.

In any particular case, the pressure used will be experimentally determined, and is usually not highly critical. Note that no material can be cut without any assist gas. High pressure compressed air can be used as an assist cutting gas in certain instances.

A P P E N D I C E S

Appendix I

Article prepared by ULO Optics Ltd.

SECTION (12) TROUBLE-SHOOTING, AT THE FOCUS.

PROBLEMS AT THE FOCUS IN $C0_2$ LASER PROCESSING SYSTEMS.

12.1/ General introduction

The focusing lens is often the first item to be blamed when a laser system fails to provide an adequate cut or weld. This is rather strange, since over many years of observation by optical suppliers and skilled laser engineers, it has been found that the properties of C02 laser focusing lenses (as supplied) are almost invariably not the cause of problems in laser processing. There are very many reasons why process failure or component failure can occur, some more subtle than others.

Section (12) has been prepared in order to help identify some of the many other sources of problems that can arise in $C0_2$ laser systems around the lens/nozzle/focus region. These other sources of problems can be investigated by the laser user before applying erroneous blame on the lens itself.

V&S manufacture a wide range of ZnSe focusing lenses. All of the 150+ standard types of lens are made in production batches, from the same material, and coated as part of an even larger batch.... typically 100 off. So, it would be extremely rare for one lens out of a batch to be at fault. Each lens is quality assured during fabrication of the substrate. Each coating batch is subsequently quality assured at (at least) 20%-25%(1) inspection levels for absorption and cosmetic appearance.

Just about the only intrinsic reason for process failure 'due to the lens' would be supplier or customer misidentification of the required item, perhaps resulting in the use of a lens of incorrect focal length or of inadequate thickness for the assist gas pressure in use.

The V&S ZnSe lenses are supplied with surface smoothness levels, and low absorption values unsurpassed by any other supplier. The laser damage threshold of the lens, if clean and correctly mounted, is around 3000W/mm, (see section (10)), a level which lenses are never expected to endure in real systems.

Nevertheless, laser users are often too keen to replace a lens rather than identify the true source of a problem. The fact that this wastes time for the supplier, and may lead to technical dispute, is relatively trivial in comparison to the wasted time, and reduction in efficiency for the end-user, *created by his avoidance of the real problem.*

Note (1): - Prior to the final coating operation, components are inspected at the 100% level. QA results have no correlation with claimed process problems or component failure, strongly indicating that 'failure' is unrelated to component quality.

The topics which follow have been designed as an outline guide for laser operators to check, if they feel that a 'lens' or optical problem exists.

12.21 The incoming beam

When system performance is not as expected, these are some of the features of the laser beam, incident upon the lens, that should be checked:-

i) Is the beam correctly aligned to the centre of the lens?

ii) Is beamclipping avoided at the lens? (See section 2.10). Are the low energy 'tails' of the beam intensity distribution missing the metalwork/mount?

iii) Is the beam diameter within normal operating limits at the lens? (Ie: check for upstream thermal lensing which often reduces the beam diameter at the lens, or 'ballooning', perhaps due to atmospheric contamination in the beam path by solvents or other gaseous contaminants).

iv) Is the beam mode structure of normal operating quality? Is the beam cross-section reasonably circular? Most cutting applications require a low order lateral mode structure.

v) Are there pointing instabilities in the beam? Beam pointing instability can be due to degraded laser cavity optics or unwanted movements in upstream beam delivery optics ... especially mirrors.

12.3/ The lens mount

i) Is the lens mounted with the correct orientation? For meniscus lenses the concave surface should be towards the workpiece.[(2)] [See also fig 12.001).

ii) Is the lens securely fixed (does not move or 'rattle')?

iii) Check that the lens mount shows no signs of heating-up by a mis-aligned beam, or by an oversized beam. Signs of problems are removal of anodising (burnt-off by the laser beam), with debris evaporated onto the upper surface of the lens.

iv) Check that the lens clamp ring (or equivalent) is not over-tightened. Over-tightening imparts massive stresses and leads to a significant reduction in laser damage threshold. See also section (10).

v) Does the lens mount have adequate cooling? Check that the water flow is not blocked.

vi) Was the lens (diameter) a tight fit in the lens cell? Mechanical parts should have approx 0.1mm dia. clearance. If the clearance is inadequate, then laser-heating of the lens plus water-cooling of the mount can cause massive mechanical stresses, causing immediate degradation in function of the lens, and early lens failure due to cracking and/or burn-out.

vii) If lens breakage is a problem, check that the mount is correctly designed. If a mount with spherically curved spacers or clamp rings is used, then the mount design is probably the culprit. Absolutely avoid over-tightening until a correctly designed mount can be obtained.

viii) Check that the clamp ring is not cross-threaded and so seating unevenly on the lens.

ix) Dirty mounts/clamp rings can cause lens breakage, especially in conjunction with the use of curved spacers/clamp rings, over-tightening, and tight-fitting lenses. Mounting a lens onto a 'large' single particle, typically 50-100um in size, has been observed to cause linear, central cracking of thick ZnSe lenses.

x) Check the cleaning procedure before installation of the lens. If a modern substitute for CFC-based solvents has been used then invisible residues, lasting for hours, can remain on the lens surfaces and cause significant performance degradation. Ideally, clean lenses using water-free acetone.

Note (2):- A symptom of incorrect orientation of a meniscus lens is an unexpected increase in apparent working distance. Spherical aberration will increase, possibly leading to process failure. The beam may also be clipped at the nozzle aperture. (See fig 12.002].

12.4/ The nozzle assembly and assist gas

The nozzle and assist gas conditions have as much influence on the laser cutting process as the optics!

i) Check that the focus point is at the required distance below the nozzle tip. In typical cutting operations this will be perhaps 2-5mm, but this distance may be greater in the cutting of thick section metals. Large changes in localised gas pressure can occur along the axis away from the nozzle tip. This effect must be taken into account when replacing a lens, perhaps from an alternative supplier, if minor re-focusing is needed.

ii) Is the nozzle aperture size correct for the required operation?

iii) Is the nozzle condition adequate? Badly worn nozzle tips can lose processing efficiency.

iv) Check that the nozzle aperture is not clipping the beam. If clipping[(3)] is occurring the nozzle tip will get hot after a few minutes of operation of the laser.

v) If using assist gas, check that the correct amount is emitted from the nozzle tip, and not leaking elsewhere in the focus head assembly.

vi) Check that the type and purity of the assist gas is appropriate to the process (especially in oxygen-assisted processes).

vii) If using gas bottles, check that the bottle is not nearly empty. Occasionally contamination has been noted towards the end of a bottle supply.

viii) Is the nozzle set at the correct 'stand-off' distance from the workpiece?

ix) Is the assist gas dry and clean (not depositing moisture or other contamination onto the lens)?

Figure 12.001 The correct orientation for a meniscus lens

Spherical aberration is minimised, and the focal point is in the correct axial location relative to the nozzle tip (and the system design in general).

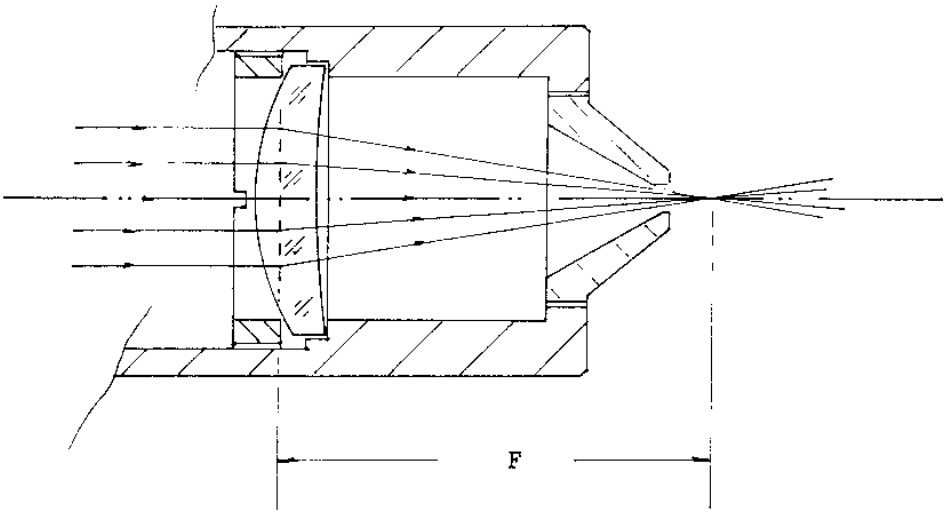

Figure 12.002 Incorrect orientation for a meniscus lens

The working distance is extended beyond the design region. Spherical aberration is maximised, leading to reduced focused energy density. The increased beam width at the nozzle Up can lead to beam-clipping.

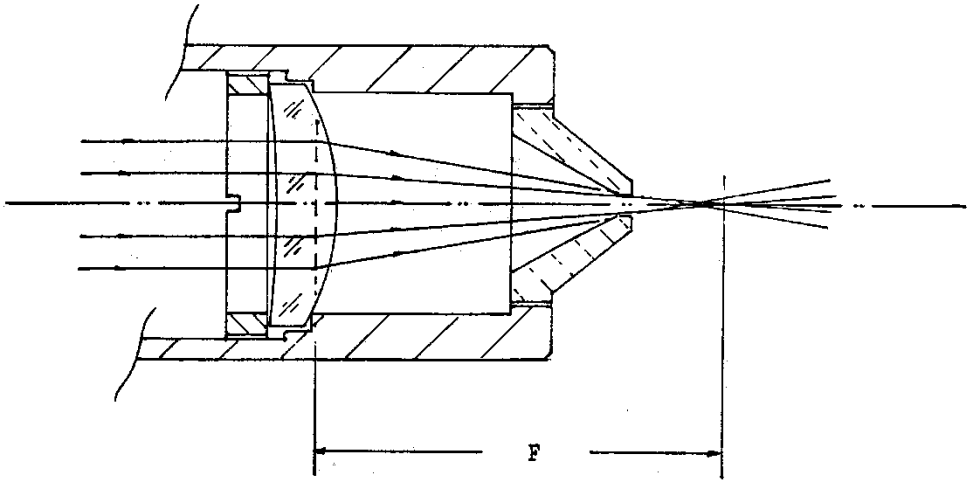

Note (3):- Clipping at the nozzle can occur through lateral displacement of the centre of the beam from the centre of the nozzle aperture or incorrect lens orientation. See also note [(2)], fig 12.002, and section 12.3i above.

12.5/ The focusing lens

We now assume that the lens is the correct type in terms of diameter, focal length, and form.

i) Is the lens clean and free from oil, moisture, excessive back-spatter and other contamination?

ii) If the lens is from a new supplier (replacing lenses from an earlier supplier) has the system focus been re-set? (4)

12.51 Lens breakage

If lens breakage has occurred this can generally be allocated into one of several categories, although in many instances there are several factors contributing to breakage:-

(a) **Breakage mainly due to gas pressure.**

If the assist gas pressure is beyond the design limit f or the lens, then the forces created by the gas pressure can fracture the raw material. This is very rarely encountered.

(b) **Breakage due to massive mechanical stresses.**

Excess mechanical stress is often associated with lens mounts with curved spacers/clamp rings and/or *over-tightening of clamp rings*. The laser operator may be able to overcome problems of over-tightening by purchase of a dial torque wrench and the manufacture of appropriate small tools for adaptation of the wrench to the clamp ring(s).

A torque of 0.5 Nm will be found to be sufficient.

Massive mechanical stresses are sometimes associated with faulty mount design, where perhaps a mechanical designer has specified too tight a fit between the upper allowed lens diameter and the lower mount diameter. In these cases, dust particles, residue of earlier contamination, over-clamping, laser-heating of the lens, water-cooling of the mount ... all contribute to early lens breakage or burn-out.

Breakage due to mechanical stresses may take the form of cracking without burnthrough if the stresses are very uneven.

In some cases cracking may be evident only over a limited area near the centre of the lens.

This phenomenon is often observed and is sometimes associated with dirty re-assembly by the user.

Note (4): Some manufacturers make erroneous calculations of lens focal length. See section 12.52.

Breakage due to mechanical stresses may take the form of burnthrough without cracking (ie: cracking to the lens edge) if the stresses are fairly even. This phenomenon might occur when the lens user has taken care to ensure cleanliness, but over- tightened the clamp ring, and/or has a tight-fitting lens mount.

Stress-related breakage usually occurs in a short time-scale, perhaps a few hours or just a few days. It is sometimes associated with one contaminating particle landing on the upper surface of the lens, creating a further localised stress in a component whose mounting conditions are such that it is anyway almost stressed to the point of failure.

(c) **Breakage due to beam-clipping.**

The beam striking a lens mount may cause failure due to a combination of effects. There will be uneven stresses created due to 'one-sided' excessive heating of metalwork, at the same time as the evaporation of debris onto the lens surface. This cause of failure almost inevitably leads to burnthrough of the lens, often with complete cracking/shattering of the lens.

12.52 Focal length problems

(a) Check orientation of lens ... see 12.3i.

(b) Re-set the system focus and nozzle stand-off.

(c) Check process efficiency to avoid unnecessary backspatter (may need minor adjustment to stand-off).

The system is now set to use lenses of focal length of the correct nominal value within +/-0.5% accuracy.

12.61 Process failure, a summary

There are very many reasons why a laser process may be inefficient or fail. Some of the main reasons are given above in the form of a series of checklists.

When purchased from one of the reputable, high-quality suppliers of C02 laser optics, process failure will almost never be attributable to the focusing lens, early in the life of the lens. Later, due to unavoidable backspatter and/or cleaning scratches which occur over some expected lifetime, process failure may occur due to normal degradation of the lens in use.

Lenses do degrade in use.

This is often due to process back-spatter and fume contamination[(5)], and sometimes to surface defects caused in cleaning/handling.

If the process parameters have been incorrectly set, as may happen if replacing lenses from alternative suppliers [(4)], then process back-spatter is likely to increase, and the component lifetime will be shortened.

The unavoidable stresses created by the uneven lens-heating effect of a typical laser beam will, in the long term, cause a form of 'ageing' of the raw material. (Greatly accelerated when high mechanical stresses are also present!).

Early (seconds or minutes) process failure related to a focusing lens can often be attributed to over-tightening. The mechanical stress causes 'returnable' stress birefringence in the material. This deforms the wavefront and spoils the beam characteristics at the focus.

The lens material may return to 'normal' after short-term use under these conditions, and so no fault found with the lens upon further inspection.

Note (5): **(New problem)** Some laser users spray the metal workpiece with an aerosol intended to increase absorption of laser power. In one case aerosol has reached the lens, and caused immediate process failure. (The hardly-used lens had the highest ever measured abs% value. The contamination could be removed, but not using acetone).

Appendix II

MATERIAL QUALITY VERSUS CUTTING QUALITY MILD STEEL

1) MILD STEEL

From several conversations with different Steel suppliers it seems that extreme care has to be taken when ordering material. As an example: When ordering 350-Steel (hot rolled) it seems that for the same specification - 350 - different surface qualities can be obtained. From a very rusty, unflat and "scale peeling" surface up to perfectly unoxidized and homogenous quality. Therefore, it is not enough only to specify a type number to obtain "good" steel. From one supplier to another the specifications and quality for the same type of steel can differ.

IMPORTANT WHEN ORDERING STEEL:

- Steel type number
- Surfaces should be rust free
- Homogenous composition
- Certificates to control material consistency.

Some suppliers offer special "Laser Steel". The reasons why this steel cuts better would be the following points (according to the suppliers information):

- Low silicon content
- Homogenous composition
- Rust free surfaces
- Flat and stress free

Other suppliers offer "pickled and oiled" steel plates up to a certain thickness to obtain a consistent and rust free surface.

2) STAINLESS STEEL

For stainless steel, the composition and the homogenity of the material (Ex. Stainless 304) can vary between different suppliers. Some compositions result in a more rough cutting edge and a slight dross (approx .2 mm) when they are clean cut.

Therefore, ask for certificates with the delivery. And once a good supplier is found, do not change to another one, to avoid obtaining a lower quality.

Stainless steel plates also have-to be stress free. Otherwise parts will be deformed ("bent") after they are cut. And this is not coming from a too high heat input, but from the internal material stress. Most of the suppliers offer stress free stainless steel plates. But, some try to gain the market by offering cheaper material. The result is only that the quality is not as good.

IMPORTANT FOR STAINLESS STEEL:

- Composition and the Homogenity
- Flat and Stress Free
- Certificates with Delivery

3) ALUMINUM

- Aluminum alloys containing a high percentage of magnesium cut the best and easiest.

- Aluminum of a high purity factor (Ex. 99.5%) does not cut so well and requires higher power, because of the higher reflection and higher power dissipation through the material.

- Aluminum plates having a too "shiny" surface can create piercing problems because of being too reflective. Some alloys have a more "dull" surface. (High magnesium percentage).

IMPORTANT FOR ALUMINUM:

- If possible, use "Alu-Mg" alloys.

- More or less "dull" surface.

Bibliography

LMC Laser Services Pty. Ltd.
Metal Working Jan 1997

Air Liquide
Laser Cutting

C L Hallmark
Laser The Light Fantastic

Directed Light
Component Catalogue

IPG Photonics Corporation

ULO Optics Ltd.
Trouble Shooting , At The Focus

Synrad Inc.
Distributor Handbook

Laser Power Optics

CSIRO

Index